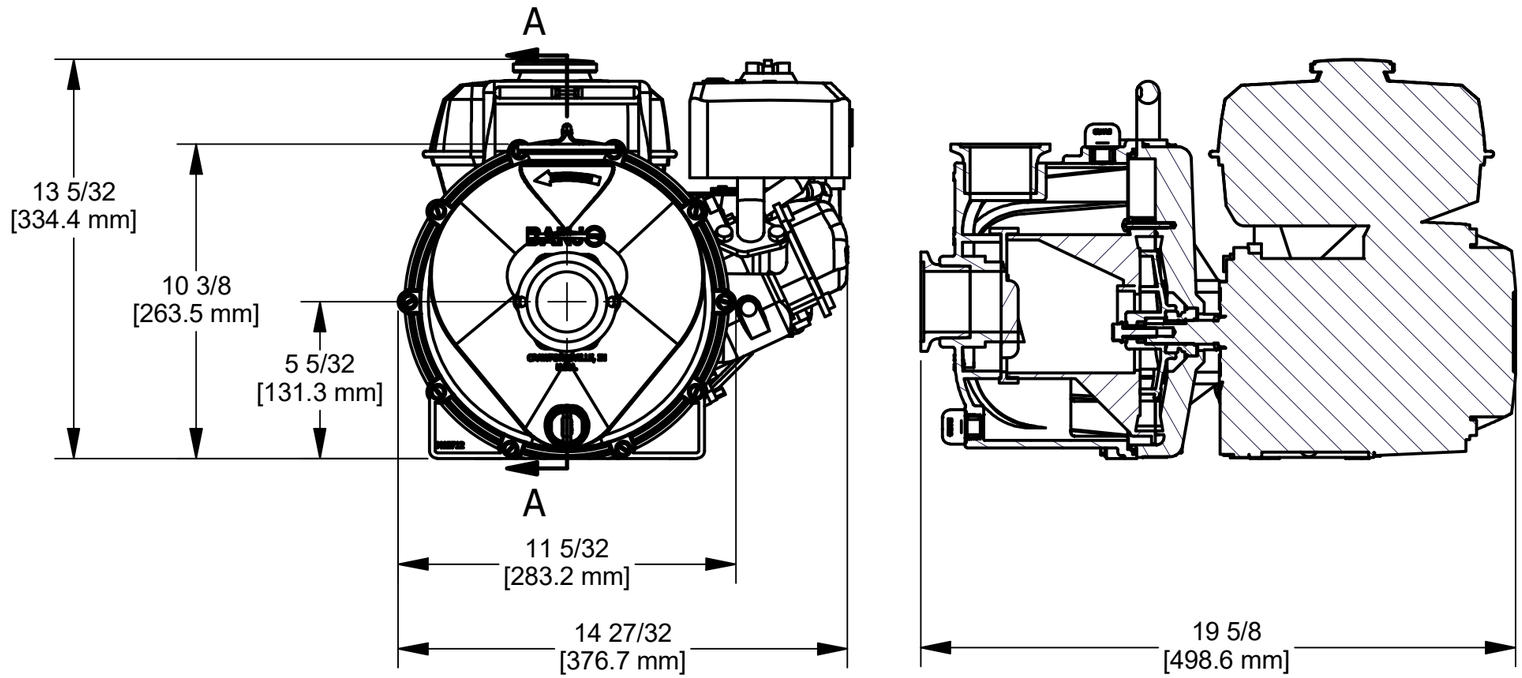

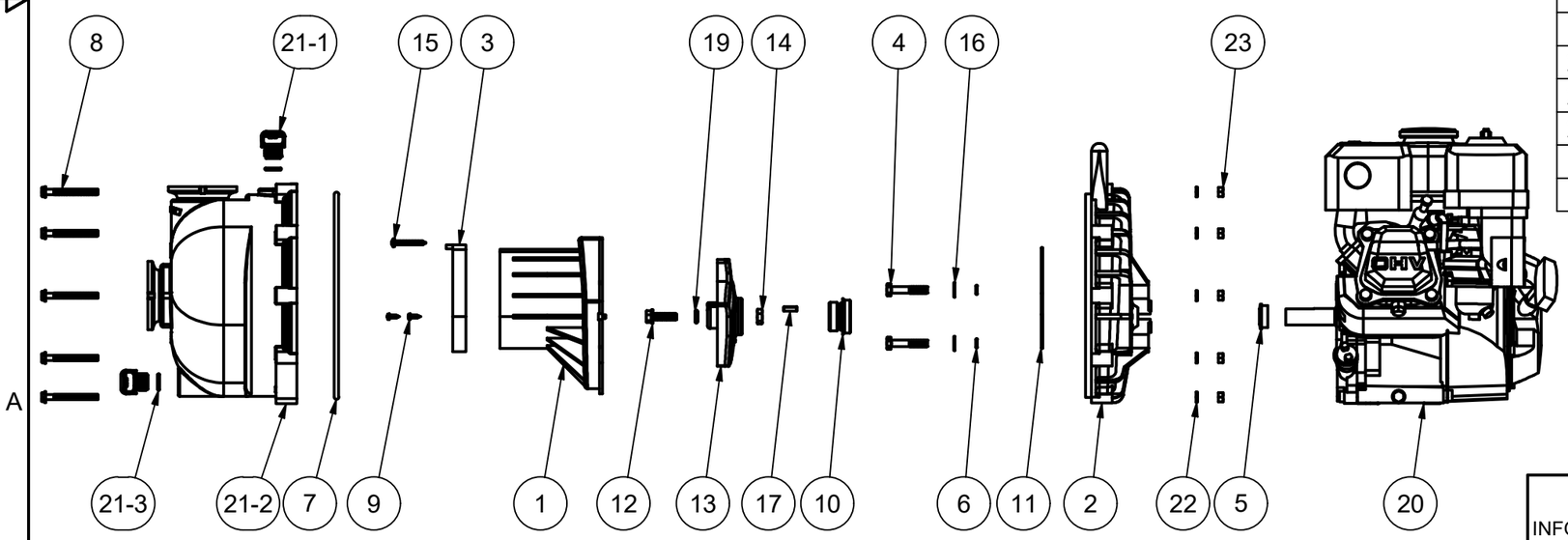

PARTS LIST			
ITEM	QTY	PART NUMBER	DESCRIPTION
1	1	12702A	2" POLY PUMP VOLUTE
2	1	12703A	POLY PUMP REAR BRACKET
3	1	12705	PUMP CHECKVALVE, EPDM
4	4	12715A	5/16-24 X 1 3/4" HHCS WITH TORQ-PATCH
5	1	12716	PUMP SLINGER
6	4	12717	AS568A -011 O-RING, EPDM
7	1	12719A	AS568A -375 O-RING, EPDM, BLACK
8	10	12720	1/4-20 X 2 1/2" SL IND HWHS
9	2	12725	#6 X 1/2" PPH SMS
10	1	12733	MECHANICAL SEAL ASSY
11	1	12754	O'RING SEGMENT
12	1	12765A	5/16-24 X 1 1/8" HFS
13	1	12772	IMPELLER
14	1	12775A	7/16-14 HEX NUT
15	1	12900	#10 X 1 1/2" PPH SMS
16	4	12901	5/16" FLAT WASHER
17	1	12902A	3/16" SQ. X 5/8" KEY
18	1	12910	DECAL (N/S)
19	1	A204	AS568A -204 O-RING, EPDM, BLACK
20	1	E6H	6.5 HP HONDA
21	1	M12712	2" FP MNFLD PUMP BODY ASSY
21-1	2	12777	1/2" DRAIN PLUG
21-2	1	M12712Y	2" FP MNFLD PUMP BODY ASSY
21-3	2	UV15163	#114 O'RING, EPDM
22	10	V07018	1/4" LOCKWASHER
23	10	V07019	1/4-20 HEX NUT

THIS DRAWING AND ALL INFORMATION CONTAINED THEREON ARE THE EXCLUSIVE PROPERTY OF BANJO CORPORATION.

UNLESS SPECIFICALLY NOTED, THIS DRAWING AND ITEMS SHOWN ON THIS DRAWING ARE SUBJECT TO CHANGE AT ANY TIME.

BANJO CORPORATION
150 BANJO DRIVE, CRAWFORDSVILLE, IN 47933
WEB SITE: WWW.BANJOCORP.COM
E-MAIL: BANJOSALES@IDEXCORP.COM

DESCRIPTION
2" FP MNFLD PUMP 6.5HP HONDA

PART NUMBER
M220PH6